SETTING AND ADJUSTMENT SHEET FOR ALL AXIS MODELS

ADJUSTMENT POINTS Shown in letters **A** through **F**

COMPONENTS Shown in numbers ❶ through ⓬

FOR ALL AXIS MODELS

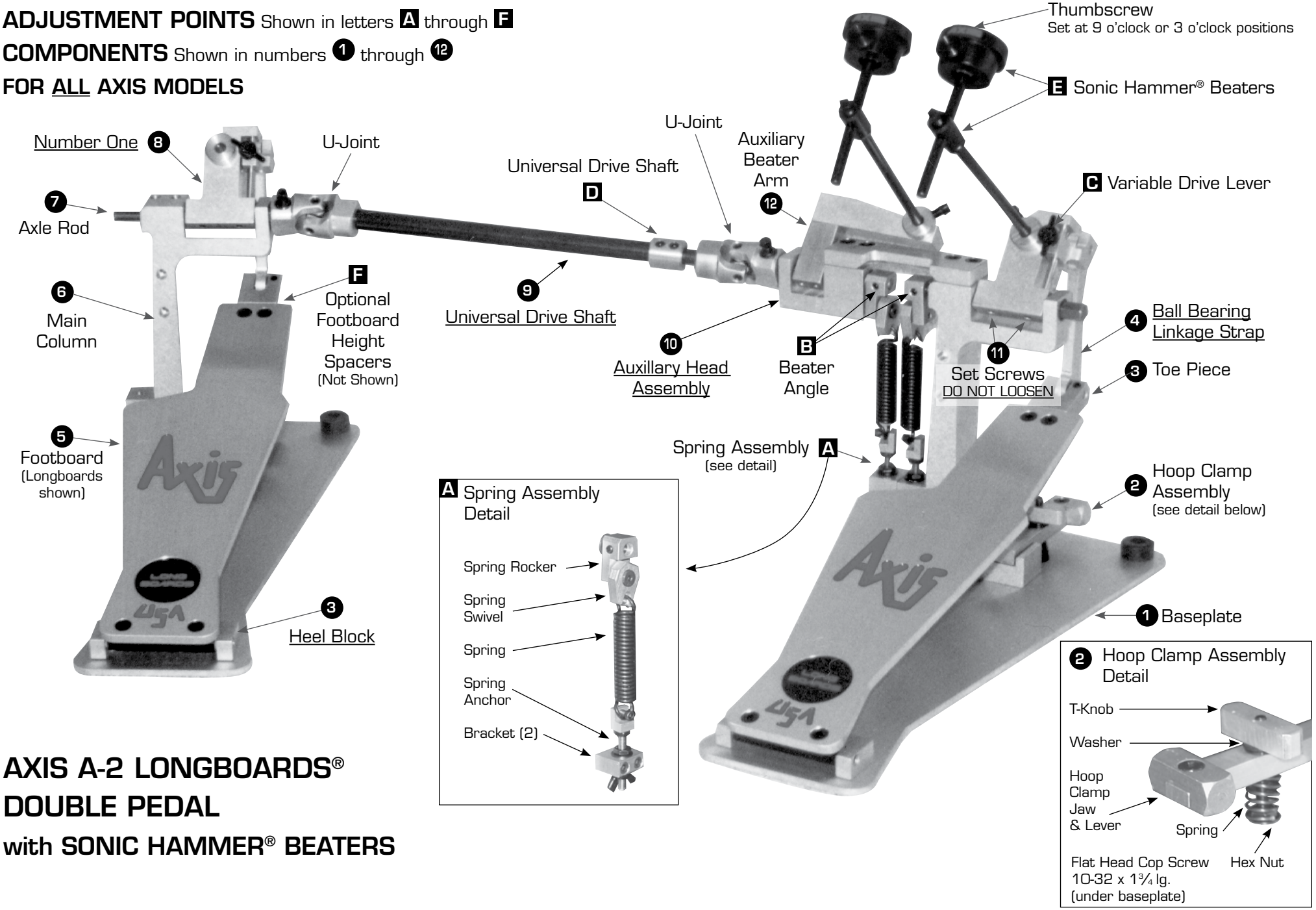

AXIS A-2 LONGBOARDS® DOUBLE PEDAL

with SONIC HAMMER® BEATERS

AXIS PERCUSSION • 24416 S. Main St. • Suite #311 • Carson, CA • 90745 • Tel: (310) 549-1171 • Fax: (310) 549-7728 • **www.axispercussion.com**

LEGEND FOR SETTING AND ADJUSTMENT SHEET

AXIS PERCUSSION takes great pride in specializing in precision foot pedals and drum hardware. Our products are fabricated from solid stock, each part being machined in our factory in Carson, California, U.S.A. We are dedicated to the highest level of quality and craftsmanship.

PEDAL ADJUSTMENTS

A SPRING ASSEMBLY — The spring "pull down" anchors are secured by tightening a wing-nut when the desired spring tension is reached. (Note: the superior balance and structural rigidity of AXIS pedals allows maximum rebound and performance at very light spring tensions.) Tension Springs — Regular Duty Springs shown. Heavy Duty Springs available.

B BEATER ANGLE — This very important adjustment can be easily overlooked. Two (2) set screws (one front side, one back side) lock the spring assembly to the main axle. To set the distance in which the beater comes to rest away from the drumhead, loosen set screws, position beater to preferred angle, re-secure the [2] set screws.

If the pedal feels too heavy or sluggish, set the beater to rest closer to the drumhead, or if the pedal feels too light, increasing the beater angle (distance from drumhead) will add velocity and power to the stroke.

C AXIS A SERIES Only — Variable Drive Lever SETTING. Turn knob counter clockwise to loosen, slide lever to desired position. Full-out delivers longer foot board action and heavy beater impact: Full-in gives shorter foot board action and maximum beater rebound. Turn thumbscrew clockwise to re-tighten. NOTE: Do not overtighten.

D For all AXIS Double Pedals — UNIVERSAL DRIVE SHAFT. The UNIVERSAL DRIVE SHAFT connects the AXIS Doubles. The all ball bearing construction gives AXIS Doubles a level of performance all it's own. Each end of the UNIVERSAL DRIVE SHAFT connects over "hex bar" ends of the axles. Drum key lock screws secure the swivels. Loosening the set screws [3] at D. will allow the telescoping inner rod to be free. When the desired position of both pedals (and also the footboard angles) is reached, the [3] set screw secure the assembly. (Note: Since the inner rod has not "flats", the footboard angle of the slave pedal can be set with an additional degree of flexibility.)

E SONIC HAMMER BEATERS —Drum key lock screws secure the transverse upper rods. (Note: AXIS A SERIES have exceptional response with the rods set to full or nearly full extension., Thumbscrews secure the delrin beater head to keep the impact contact flat to the drumhead. The hard felt, cork or bare delrin striking surfaces can be selected.

F Optional Footboard Height Spacers (Not shown). These can be inserted if a higher footboard angle is preferred.

Note: The LONGBOARDS UPGRADE KIT will retrofit any existing AXIS pedal.
For any further questions, please call AXIS PERCUSSION for technical support at (310) 549-1171.

PEDAL COMPONENTS

1. **BASEPLATE**
2. **HOOP CLAMP ASSEMBLY** (see detail picture)
3. **TOE PIECE OR HEEL BLOCK**
4. **BALL BEARING LINKAGE STRAP**
5. **FOOTBOARD** (LONGBOARDS shown)
6. **MAIN COLUMN**
7. **AXLE ROD**
8. **NUMBER ONE**
   (Our name for Main Rotor and Beater Holder)
9. **UNIVERSAL DRIVE SHAFT**
10. **AUXILIARY HEAD ASSEMBLY**
    for all Axis Double Pedals
11. **SET SCREWS** Locking #1 Rotor to Axle Rod
    – DO NOT LOOSEN –
12. **AUXILIARY BEATER ARM**

NON-WARRANTY RECONDITIONING SERVICE

For pedals no longer under warranty, AXIS PERCUSSION offers reconditioning services.

Reconditioning for an AXIS single pedal (A, X LONGBOARDS) — **$39.95**

Reconditioning for an AXIS double pedal (A, X LONGBOARDS) — **$79.95**

Reconditioning prices do not include shipping and handling.